ROOF:REPLACEMENT

Note, one or more warnings are present in this procedure

WARNING

DANGER: HIGH VOLTAGE VEHICLE.

Risks of serious burns or electric shocks that may prove fatal.

Before carrying out any work on the vehicle, it is essential that you follow the instructions regarding vehicle lockout. This work must be carried out by an employee who is qualified and authorised to work on a high-voltage onboard networkVehicle: Precautions for the repair .

Lockout the vehicleVehicle: Lockout - Removal of lockout .

1. COMPOSITION OF THE SPARE PART

No.	Description	Thickness (mm)
(1)	Roof	0.75

2. IN THE EVENT OF REPLACEMENT

- There is only one way of replacing this part:
  - complete replacement.

CAUTION

If the mating faces of the parts to be welded are not accessible, make EGW plug welds to replace the original resistance welds (see MR 400).

mcx30.com

CAUTION

To avoid damaging the vehicles electric and electronic components, the earths of any wiring harness near the weld area must be disconnected.

Position the earth of the welding machine as close as possible to the weld area (see MR 400).

Locate the earths located near to the weld area**Earths on body: List and location of components** .

1- COMPLETE REPLACEMENT

1)PART IN POSITION

mcx30.com

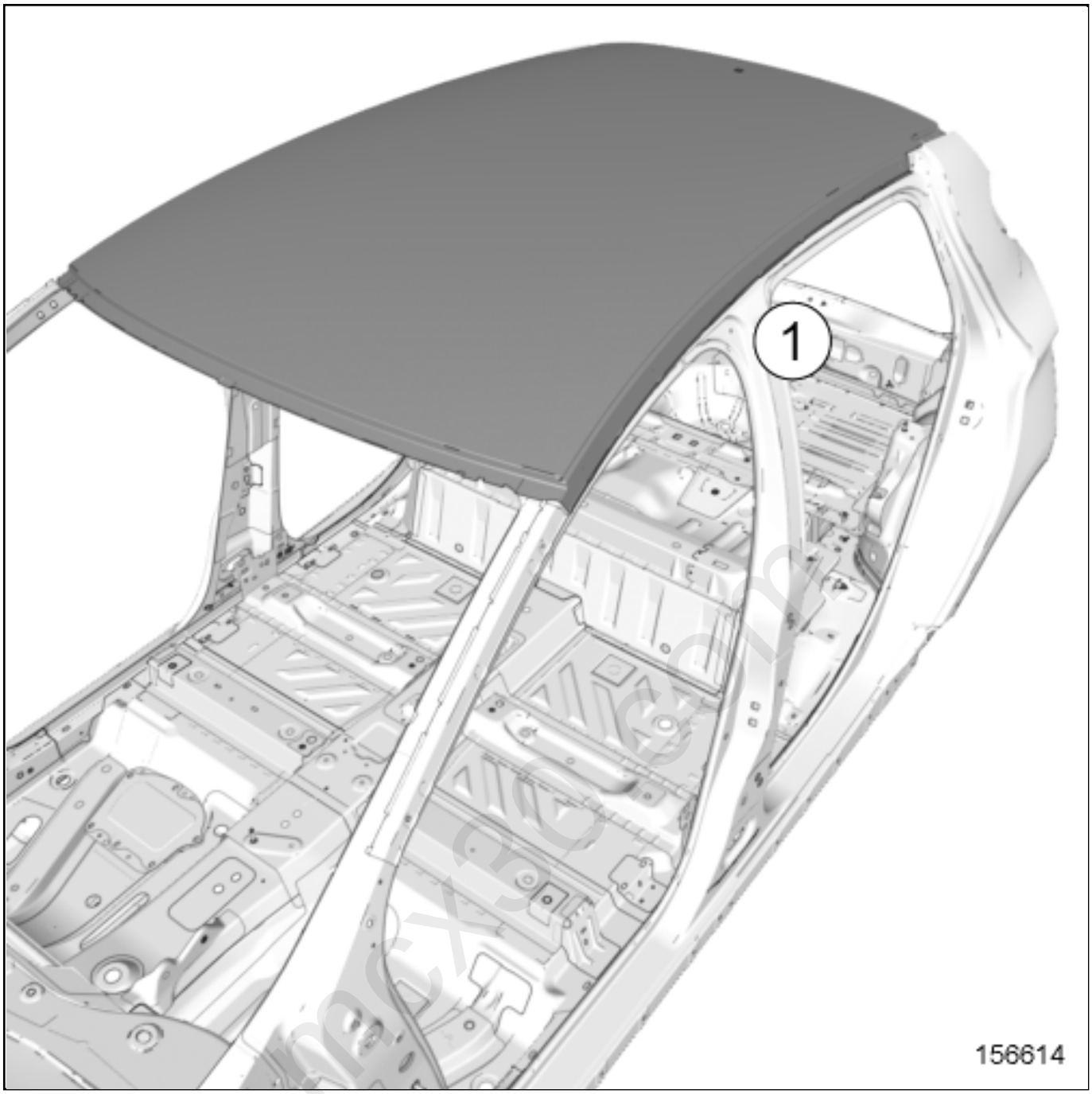

2)BONDING AREA

FRONT ZONE

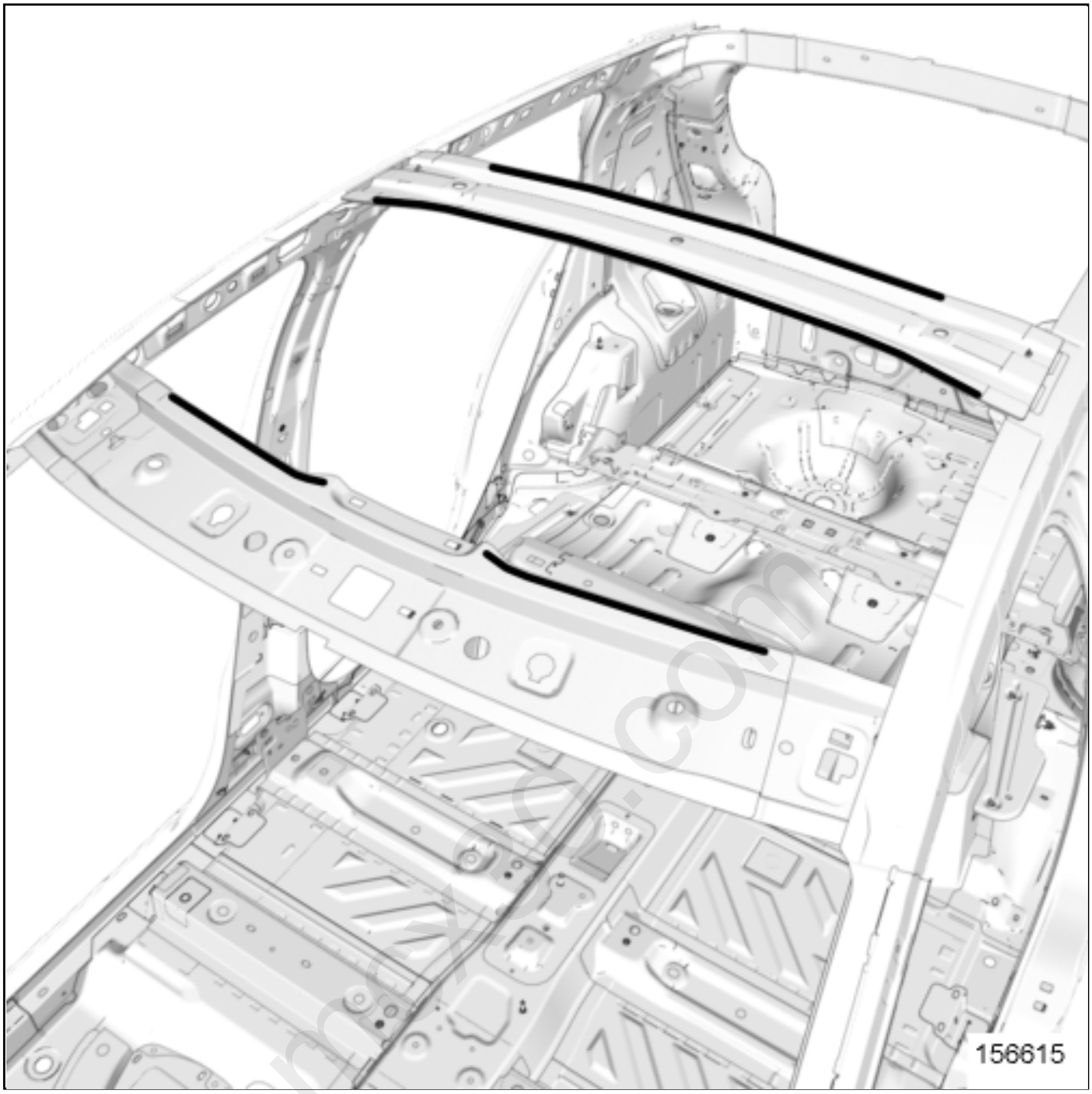

REAR ZONE

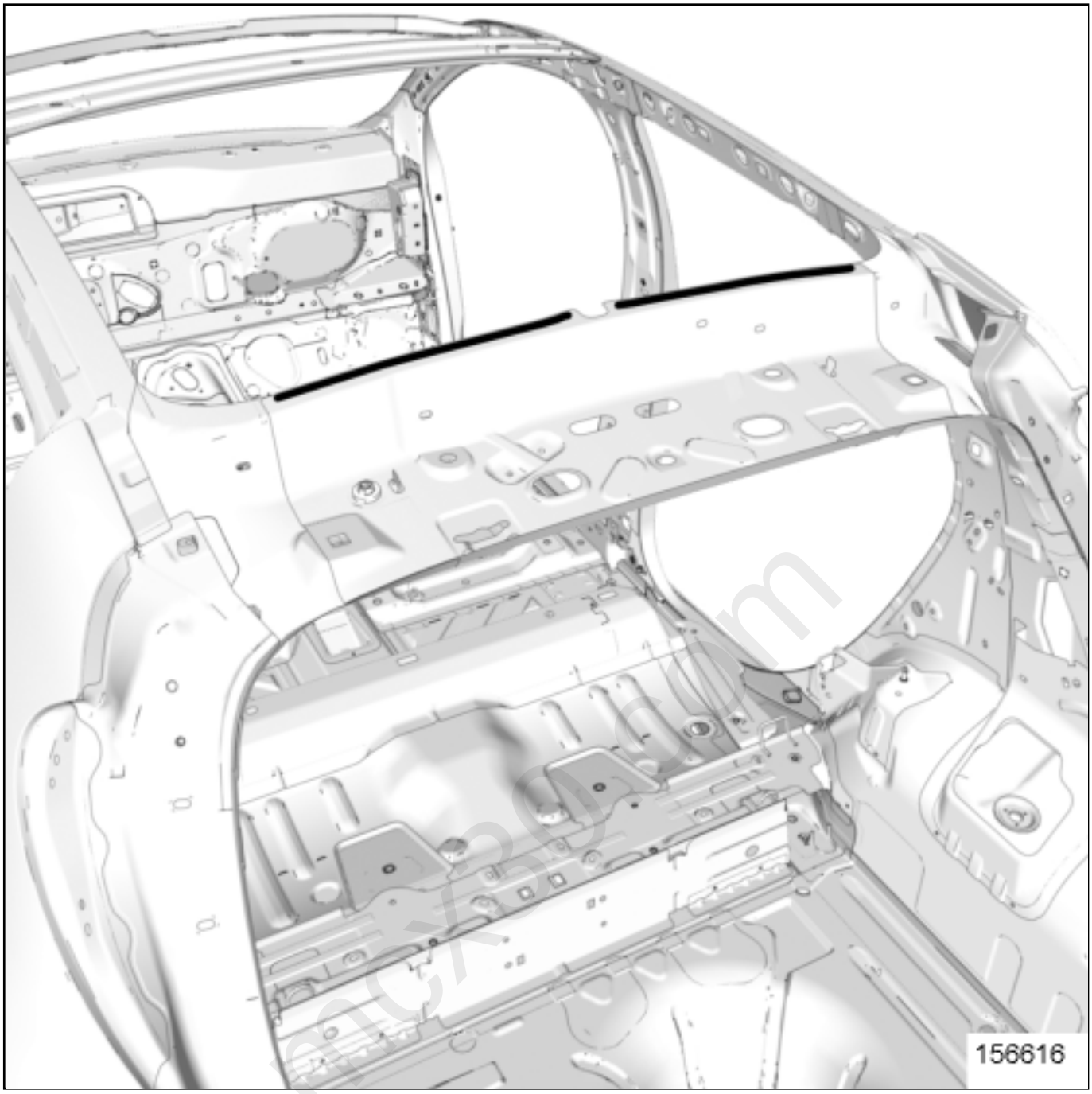
156616